ACCU-CHEK® Mobile

Roche

Accu-Chek® Mobile: System Evaluation (ISO 15197:2013)

Just test. Let the Accu-Chek Mobile system do the rest:

test test test

Authors:
Hans Kintzig
Manfred Kraft
Tiina Lappi
Klaus Rinck

2nd edition 2014
Roche Diagnostics GmbH, Mannheim, Germany

Table of Contents

The Accu-Chek Mobile system 5

Introduction 5

The main features at a glance 6

Specifications of the Accu-Chek Mobile system 7

Performing a blood glucose test with the Accu-Chek Mobile system 9

The Accu-Chek Mobile test cassette 9

The Accu-Chek Mobile test principle 10

The Accu-Chek Mobile control solutions 11

Performance evaluation of the Accu-Chek Mobile system 12

Accuracy according to ISO 15197:2013 12

User performance evaluation according to ISO 15197:2013 14

Measurement repeatability in accordance with ISO 15197:2013 15

Intermediate precision in accordance with ISO 15197:2013 16

Potentially interfering active substances, blood additives and endogenous substances 17

Influence of hematocrit according ISO 15197:2013 18

User study under everyday conditions (home use study) 18

Human factors studies 18

Reliability of measurements under various environmental conditions 19

Environmental conditions 19

Mechanical stress 19

Electromagnetic compatibility (EMC) 19

Safety (electrical/mechanical) 20

Conclusion 21

Figure 1: The Accu-Chek® Mobile system

The Accu-Chek Mobile system

Introduction

Self-monitoring of blood glucose is essential for the daily self-management of diabetes. It provides the mandatory information for insulin dosing in a flexible insulin therapy and it helps to identify critically low or high blood glucose levels in order to take adequate action. Finally it provides essential feedback on how life and lifestyle affects the blood glucose level, i.e. food intake, sport, stress or infections. In all cases it enables the patient and/or the treating physician to take adequate action in order to optimize overall glycemic control and to reduce the number of hypo- and hyperglycemic events.

Self-monitoring of blood glucose must be integrated smoothly into the individual life of people with diabetes. Research has indicated that a significant portion of patients struggle to adhere to their recommended self-monitoring regime. Significant obstacles are difficulties in handling test strips and the testing procedure, lifestyle alignment (e.g lack of time or testing away from home) and forgetfulness.[1, 2]

Results from the multicenter, prospective controlled study (ExAct) showed that the use of Accu-Chek Mobile system resulted in an increased SMBG frequency towards guideline recommendations in non-adherent patients as compared to single-strip system. It was associated with overall better glycemic control in non-adherent patients. It led to a greater proportion of patients achieving clinically relevant decreases in HbA1c with glycemic improvement throughout the study period.[3, 4]

The strip-free Accu-Chek Mobile blood glucose monitoring system has resulted from the refinement of the first generation of the Accu-Chek Mobile system: The main differentiating factor remains the test cassette with 50 strip-free tests on a continuous tape. This eliminates the need to handle or dispose of single test strips, providing a new level of convenience to people with diabetes. In addition, the new Accu-Chek Mobile blood glucose monitoring system includes an attached lancing device with a 1-Click action to prime and release in one step, and the Accu-Chek FastClix lancet drum with 6 preloaded lancets. The strip-free Accu-Chek Mobile system provides all that is needed to monitor blood glucose- making it easier, especially for insulin-treated patients. The new Accu-Chek Mobile system is not only strip-free and simple, it is also smart. Its integrated reporting function allows for easy blood glucose visualization and puts blood glucose values into context, helping to make decisions for optimized diabetes management.

The Accu-Chek Mobile system consists of the Accu-Chek Mobile blood glucose monitoring system, the Accu-Chek Mobile test cassette, the attached Accu-Chek FastClix M1 lancing device and the Accu-Chek FastClix lancet drum.

Also available is the Accu-Chek Mobile control solution and the Accu-Chek FastClix M1 AST cap, a special cap for blood sampling from alternative sites.

[1] Wijsman I. Patient-reported barriers in diabetes management and areas of opportunity for health care professionals. Poster presentation at the 14th Annual Conference of the Federation of European Nurses in Diabetes (FEND); 2009 September 25–26; Vienna, Austria

[2] Batten L. Survey of blood glucose testing among Diabetes UK lay members. Crossbow Research, April 2004

[3] Maran A. et al.: Use of an integrated strip-free blood glucose monitoring system increases frequency of self-monitoring and improves glycemic control: results from the ExAct study. Journal of Clinical & Translational Endocrinology 1 (2014) 161–166

[4] Fortwaengler K. et al. Better Adherence and Glycemic Control with the Integrated Strip-Free Accu-Chek Mobile System at Marginal Extra Cost – Learnings From the ExAct Study. Diabetes Technology & Therapeutics (2014) 16: [Suppl 1]

The main features at a glance

50 strip-free tests on a continuous tape
The test cassette contains 50 strip-free tests on a continuous tape. This eliminates the need to handle or dispose of single test strips.

Easy lancing with 1-Click-action to prime and release in one step
The Accu-Chek FastClix M1 lancing device offers a new feature, 1-Click lancing, allowing priming and lancing to be done in one single step (just press the release button once). It can be used both attached to and detached from the Accu-Chek Mobile system.

6 preloaded lancets in a drum
The Accu-Chek FastClix lancet drum containing 6 sterile lancets is placed in the lancing device. This means that there is no need to see or touch single lancets. The user can easily advance to the next sterile lancet by pushing the lancet changer back and forth.

Automatic coding – no manual coding required by the user
Each test cassette contains an RFID (radiofrequency identification) chip. This automatically codes the system when a test cassette is inserted and informs the system about the specific properties of this test cassette.

Text supported operation
The system takes the user through all the operations step by step in the language selected. Currently the Accu-Chek Mobile system supports more than 20 languages. The text is supported by symbols and graphics where necessary.

Test reminders
The user can set a test reminder after a test has been performed. These reminders can be set to occur in 1, 1.5, 2, or 3 hours in the future and occur only once. In addition up to seven standard individually programmable test reminders, which are repeated daily, can be set. When either type of test reminder occurs, the user can directly initiate a test via the user interface.

Target range for results
The user can set an individual target range for blood glucose values. The target range gives the blood glucose values which should be achieved if the treatment is optimal. If a result is above or below this range, a symbol on the display will draw attention to this.

Flagging results
The user can flag results with various symbols which indicate particular situations during the test (pre- or post-meal, other). In addition, results can also be flagged as a control test.

Large memory
The system automatically saves up to 2,000 results with the time and date of the test and all other information flagged in association with the test.

Integrated data analysis
From the stored results, the system can calculate the averages for the last 7, 14, 30 or 90 days.

Connectivity via micro USB port
The Accu-Chek Mobile system has a micro USB port to enable connectivity to a Personal Computer (PC). Three features are available to the user when the Accu-Chek Mobile system is connected to a PC, (1) view PC-ready reports, (2) transfer data to a data management program, and (3) transfer a Comma Separated Value (CSV) file to the PC.

PC-ready reports (Integrated reporting function)
The integrated reporting function called PC-ready reports allows for easy blood glucose visualization without the need to install software or obtain specialized hardware. Four different reports (Trend Report, Standard Day Report, Standard Week Report and List Report) are presented in an Internet browser.

Failsafes
Before starting a test and during testing the Accu-Chek Mobile system performs several quality checks or sanity checks, e.g. whether sufficient blood has been applied. This ensures accurate results.

Specifications of the Accu-Chek Mobile system	
Model	Accu-Chek Mobile model U1
Measuring principle	Photometric determination of glucose by means of a mutant variant of the quino-protein glucose dehydrogenase with colour indication (Mut. Q-GDH 2, modified variant of EC 1.1.5.2), acinetobacter spec.
Measuring range	10–600 mg/dL (0.6–33.3 mmol/L)
Measuring time	Approximately 5 sec (depending on the blood glucose concentration)
Operating conditions	Temperature: +10 to +40 °C (+50 to +104 °F) Humidity: 15 to 85 % relative humidity
Sample material	Fresh capillary blood
Sample size	0.3 µL (min. sample size), 5.0 µL (max. sample size)
Sample dosing	Blood applied to the middle of the yellow test area. The test area absorbs the blood quickly and hygienically (spread technology).
Under-dosing detection	Yes
Hematocrit range	25–55 %
Altitude independence	0–4,000 m (0–13,123 feet)
Test capacity of the cassette	50 tests
Coding	Automatic coding via RFID tag on the test cassette surface. No manual coding required by the user.
Reference method	Hexokinase with deproteinization, converted into plasma values according to IFCC recommendation (plasma values are 11% higher than whole blood values)
Event flag	4 different flags: Control solution, before or after meal, other
Display	Dot matrix OLED display with 100 x 128 pixels
Display text	Yes, information displayed in a combination of text, icons and animations
Languages	The Accu-Chek Mobile system currently supports 25 languages. The displayed list of languages is set according to the country of distribution before delivery. Hence it is possible that not all languages will be available in all devices.
Memory capacity	2000 measurements automatically saved with the time, date and all other information flagged in association with the test.
Statistics	Average calculation is possible for: All values, only before meal values, only after meal values, based on 7, 14, 30 and 90 days
Reminder	User can set a reminder after a test to perform another test in 1, 1.5, 2, or 3 hours time. Up to 3 of these reminders can be active at any one time. User can set 7 standard, individually programmable reminders which are repeated daily.
Error messages & warnings	In the case that an error occurs, the system communicates not only the error code to the user, but also the cause of the error, and what the user can do to prevent the error from happening again.
Acoustic data output	Data output with audible beeper sequences for visually impaired PWD's
Information management	Data transfer via Micro USB (Universal Serial Bus) port Data transfer to Roche software Data visualization via PC-ready reports (see paragraph "Specification of PC-ready reports")
Dimensions	121 x 63 x 20 mm (with attached lancing device)
Weight	Approx. 129 g (with lancing device, batteries, test cassette and lancet drum)
Batteries	2 alkaline-manganese or high energy batteries (1.5 V, type AAA, LR 03, AM 4 or micro)
Battery life	Approx. 500 tests or approx. 1 year
Auto power off	After 1 or 2 minute(s), depending on the operating status
Storage conditions	Meter without batteries and without test cassette: –25 to +70 °C (–13 to +158 °F) Meter with batteries and without test cassette: –10 to +50 °C (+14 to +122 °F) Meter with batteries and with test cassette: +2 to +30 °C (+36 °F to +86 °F) Humidity: 15 to 93 % relative humidity
Special feature	Detachable lancing device

Table 1: Specifications of the Accu-Chek Mobile system

Specifications of the Accu-Chek FastClix M1 lancing device	
Depth setting	11 depth settings, depth selection by rotating the cap
Depth setting range	0.7 to 2.2 mm
Priming & releasing of device	1-Click Lancing: Press once to lance
Changing the lancet drum	Remove cap, pull out drum from device
Advancing to next sterile lancet	On demand: by sliding the lancet changer back and forth
Indication of remaining lancets	Number of available lancets is indicated in the lancet counter window
Size of device, detached	Length 118 mm, diameter 19 mm
Weight, detached (with lancet drum)	Approximately 20.1 g including lancet drum
AST-capability	With special AST cap (grey-black with transparent bottom)
Lancet drum disposable	Accu-Chek FastClix lancet drum containing 6 sterile lancets with a needle diameter of 0.3 mm (30 G)
Disposal of used lancet drums	In regular household waste if this is allowed by the local regulations

Table 2: Specifications of the Accu-Chek FastClix M1 lancing device

Specifications of the PC-ready reports	
System requirements	A PC running an internet browser compliant with the HTML standard, e.g. Mozilla Firefox
Express download + print without saving the data	Yes
Reports	Four different reports (Trend Report, Standard Day Report, Standard Week Report and List Report) available, time range can be selected (3, 7, 14, 30, 90 days)
Save function	As .csv file
Special features	No need to install software or obtain specialized hardware, no internet connection necessary

Table 3: Specifications of the PC-ready reports

Performing a blood glucose test with the Accu-Chek Mobile system

The Accu-Chek Mobile system allows easy and convenient testing of blood glucose. The strip-free technology helps insulin-treated patients to easily monitor their blood glucose in just four simple steps.

Open tip cover. The meter turns on. The fingers have to be washed!

Prick your finger with the lancing device to obtain a small, well-formed drop of capillary blood.

Apply the blood drop to the centre of the test area. Touch the test area gently and briefly. Remove the finger when the beep tone sounds.

Testing is complete after approx. 5 seconds. Read the test result and close the tip over. The meter turns off.

Figure 2: Blood glucose testing with the Accu-Chek Mobile system

The Accu-Chek Mobile test cassette

The Accu-Chek Mobile test cassette contains a continuous tape with 50 strip-free tests. The test cassette is comparable to an audio cassette and contains two spools (Figure 3). The fresh tests are coiled on the "good spool". Moving to the "waste spool" the tape is guided over the tip of the test cassette. The system detects the position markers of the tape and stops when the test area is placed exactly above the tip of the test cassette.

After a blood glucose measurement has been completed, the used test area is spooled back into the test cassette and stored on the "waste spool".

The test tape consists of an adhesive carrier foil with 50 test areas (Figure 4). The glucose determination reaction occurs in the reactive film of each test area. The minimum sample size needed to start a measurement is 0.3 µL.

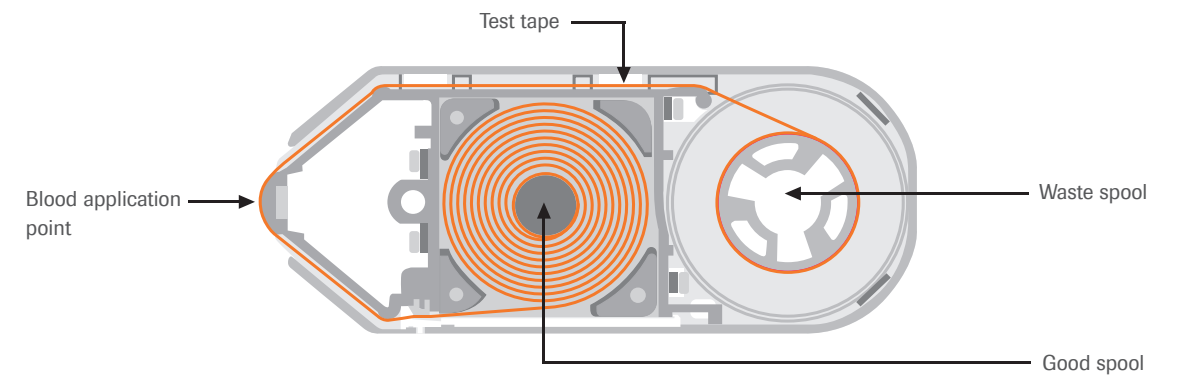

Figure 3: Schematic drawing of the Accu-Chek Mobile test cassette

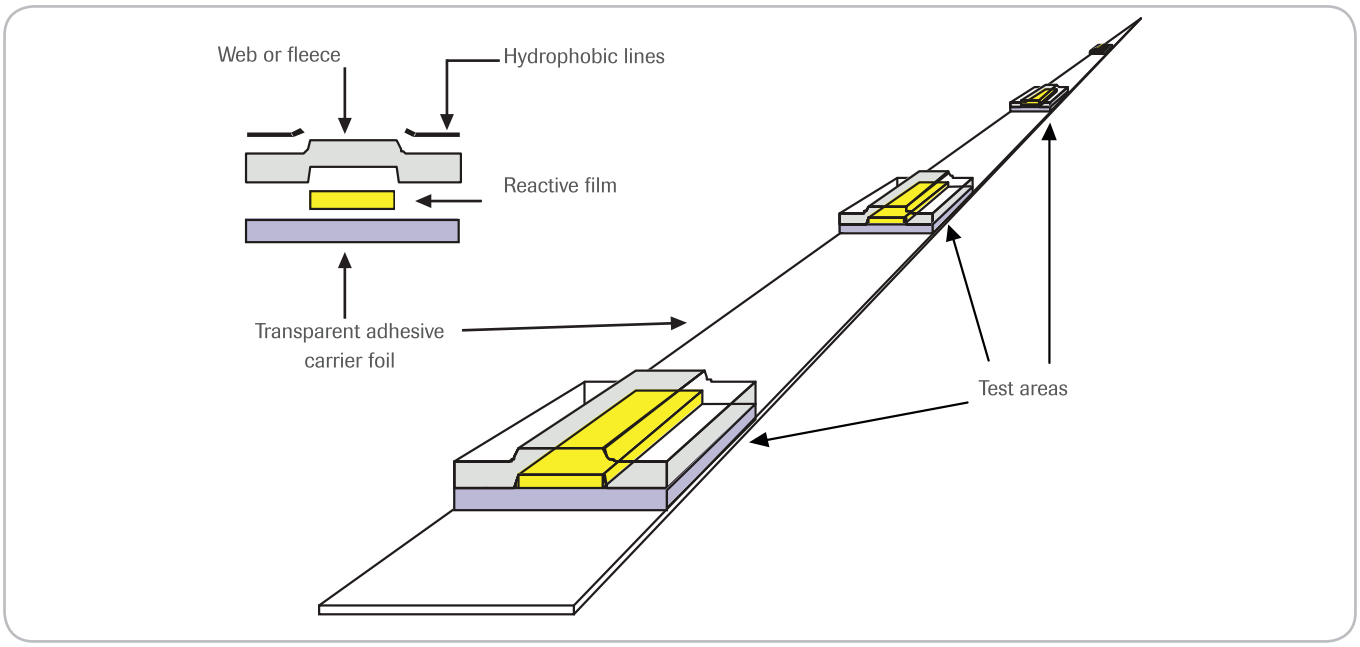

Figure 4: Schematic drawing of the Accu-Chek Mobile test tape

The Accu-Chek Mobile test principle

The determination reaction and colour formation occur in the reagent layer (Figure 5). The system measures the intensity of the colour formed in the reaction by reflectance photometry and converts it into the corresponding glucose concentration. The glucose measurement range is between 10 and 600 mg/dL (0.6–33.3 mmol/L).

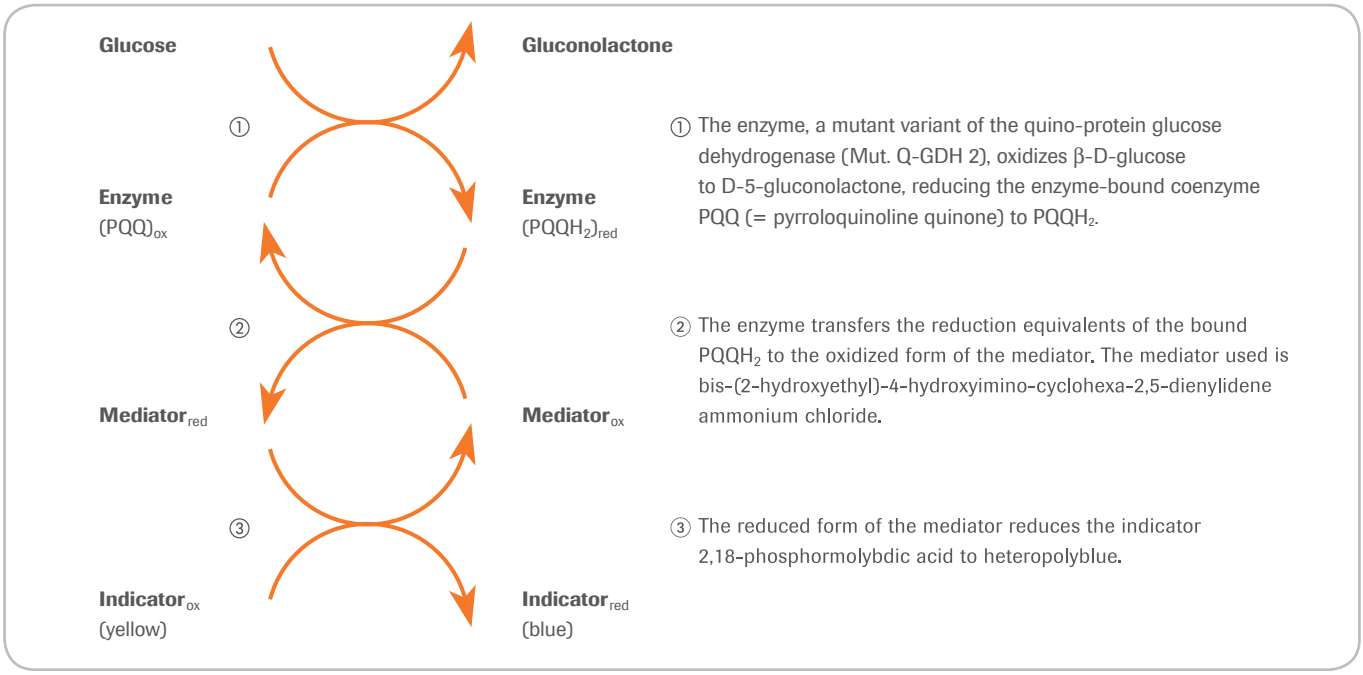

Figure 5: Determination reaction in the reactive film of the test area

The Accu-Chek Mobile control solutions

Measurements with control solution should be done from time to time to check the system, e.g. after insertion of a new test cassette, after changing the batteries, after cleaning the inside of the system or when there is doubt about a result.

The Accu-Chek Mobile control solution is provided in single-use applicators in different concentration ranges (Figure 6). These are designed for single use only and do not serve for multiple application. Different control solution glucose levels are sold in different countries. To perform a control test, a glucose control solution is applied to the test area instead of blood. After the measurement with control solution the user has to flag the result as a control test (the symbol appears in the display). At the end of the test, the system automatically checks whether the result obtained with glucose control solution is correct and informs the user of the result.

Figure 6: The Accu-Chek Mobile control solutions

Performance Evaluation of the Accu-Chek Mobile system

The performance of the Accu-Chek Mobile system was evaluated carefully at internal and external evaluation sites to prove reliability of measurement and consistency with regulatory requirements.

External evaluation		
1	H. Regal	Clinical Chemist, Investigator Diabetes Centre G. Sokol, Vienna, Austria
2	G. Freckmann A. Baumstark	General Manager Department head "blood glucose monitoring systems" Institute for Diabetes-Technology at the University of Ulm, Germany
3	R. Fischer	Test Engineer TÜV SÜD Product Service GmbH, München, Germany
4	C. Pottiez M. Reismann	Project Manager Evaluation & Usability Senior Director Usability Research Spiegel Institute Brühl, Germany
Internal evaluation		
5	K. Rinck	Co-Project Leader Design Verification and Validation Roche Diagnostics GmbH, Mannheim, Germany
6	M. Kraft I. Keth	Design Verification and Validation (System Performance) Roche Diagnostics GmbH, Mannheim, Germany

Table 4: Evaluation sites

Accuracy according to ISO 15197:2013

Evaluation site 2

One hundred capillary blood samples fulfilling the glucose concentration range distribution as specified in the standard were measured with 3 test strip lots on 2 different Accu-Chek Mobile meters (U1) per lot. The Accu-Chek Mobile system results were compared with the results obtained with the hexokinase method with deproteinization (converted into plasma values by the factor 1.11 according to IFCC recommendation). The results of the method comparison are presented in tables 5 and 6. Figures 7, 8 and 9 presents the data graphically. 597 of 600 results are within the minimum acceptable performance criteria of within ± 15 mg/dL at glucose concentrations < 100 mg/dL ≥ or within ± 15 % at glucose concentration ≥ 100 mg/dL. 599 of 600 results are within zone A and 1 result is in zone B of the Consensus Error Grid. The Accu-Chek Mobile system meets the performance criteria of the standard ISO 15197:2013.

Lot No.	Within ± 5 mg/dL (± 0.28 mmol/L)	Within ± 10 mg/dL (± 0.56 mmol/L)	Within ± 15 mg/dL (± 0.83 mmol/L)
297504	41/52 (78.8 %)	52/52 (100.0 %)	52/52 (100.0 %)
297506	42/52 (80.8 %)	50/52 (96.2 %)	51/52 (98.1 %)
297505	37/52 (71.2 %)	52/52 (100.0 %)	52/52 (100.0 %)
Combined	**120/156 (76.9 %)**	**154/156 (98.7 %)**	**155/156 (99.4 %)**

Table 5: System accuracy results for glucose concentrations < 100 mg/dL

Lot No.	Within ± 5 %	Within ± 10 %	Within ± 15 %
297504	59/148 (39.9 %)	136/148 (91.9 %)	147/148 (99.3 %)
297506	91/148 (61.5 %)	145/148 (98.0 %)	148/148 (100.0 %)
297505	66/148 (44.6 %)	129/148 (87.2 %)	147/148 (99.3 %)
Combined	**216/444 (48.6 %)**	**410/444 (92.3 %)**	**442/444 (99.5 %)**

Table 6: System accuracy results for glucose concentrations ≥ 100 mg/dL

Evaluation site 2

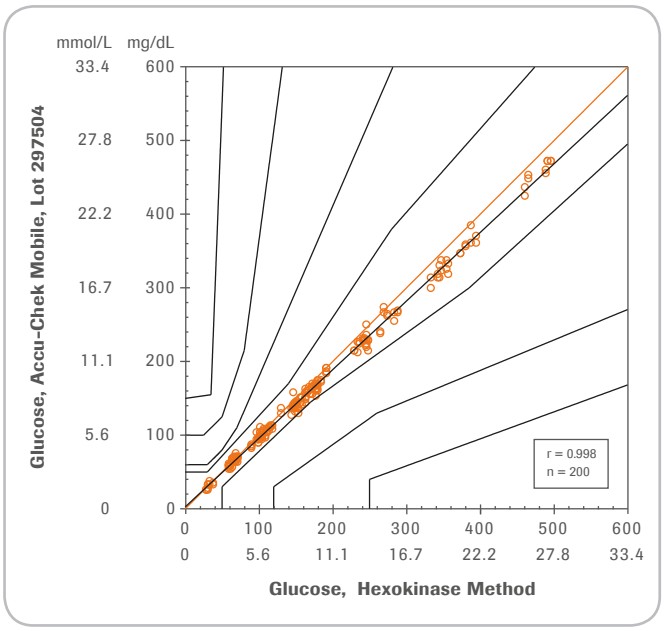

Figure 7:
Method comparison test strip lot 297504 vs. hexokinase with deproteinization. Sample material: capillary blood

Regression data: Y = 2.67 mg/dL (0.15 mmol/L) + 0.932 X
Evaluation site 2

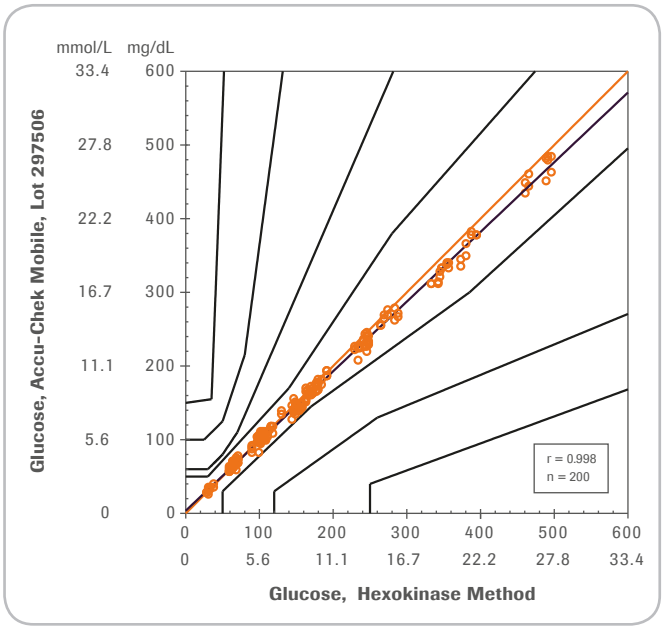

Figure 8:
Method comparison test strip lot 297506 vs. hexokinase with deproteinization. Sample material: capillary blood

Regression data: Y = 3.69 mg/dL (0.20 mmol/L) + 0.946 X

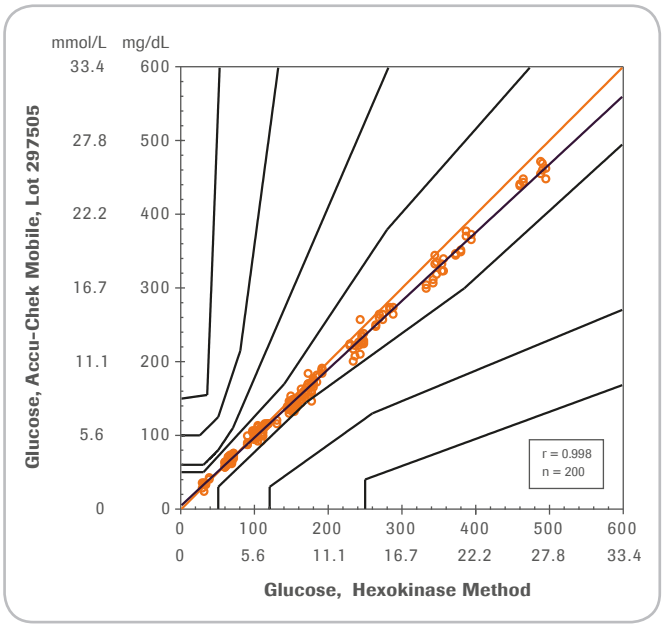

Figure 9:
Method comparison test strip lot 297505 vs. hexokinase with deproteinization. Sample material: capillary blood

Regression data: Y = 5.06 mg/dL (0.28 mmol/L) + 0.926 X

User performance evaluation according to ISO 15197:2013

Evaluation site 2

To demonstrate that users (patients with diabetes) are able to operate the blood glucose monitoring system and obtain accurate glucose results, when given only the instructions routinely provided with the system, a user performance evaluation according to ISO 15197:2013, section 8, was carried out.

Capillary blood was measured by users with the Accu-Chek Mobile system. The results obtained by the users were compared to results obtained with the hexokinase method.

97.1 % (101 out of 104) of the results obtained by users were within ± 15 mg/dL of the results obtained with the hexokinase method at glucose concentrations < 100 mg/dL or within ± 15 % at glucose concentrations ≥ 100 mg/dL (≥ 4.2 mmol/L).

It was demonstrated that users are able to operate the Accu-Chek Mobile system and obtain accurate glucose results, when given only the instructions routinely provided with the system.

Measurement repeatability in accordance with ISO 15197:2013

Evaluation site 6

Measurement repeatability was performed using heparinized venous blood samples in five glucose concentration ranges see table 7 in accordance with ISO 15197:2013 on ten Accu-Chek Mobile meters and three test strip lots. For each test cassette lot each venous blood sample was measured ten times on ten systems, so that 100 individual measurements were generated with each sample. The results were provided in table 8.

Venous blood sample No.	Glucose Concentration Ranges	
	mg/dL	mmol/L
1	30 to 50	1.7 to 2.8
2	51 to 110	2.9 to 6.1
3	111 to 150	6.2 to 8.3
4	151 to 250	8.4 to 13.9
5	251 to 400	14.0 to 22.2

Table 7: Glucose concentration ranges

Measurement Repeatability using Heparin Venous Blood					
Sample material: Heparin venous blood	Sample 1	Sample 2	Sample 3	Sample 4	Sample 5
N	300	300	300	300	300
Total Mean [mg/dL]	43	75	128	214	326
Total Mean [mmol/L]	2.4	4.2	7.1	11.9	18.1
Pooled Standard deviation [mg/dL]	**2.0**	**2.3**	3.1	4.3	7.1
Pooled Standard deviation [mmol/L]	0.11	0.13	0.17	0.24	0.39
Pooled CV [%]	4.7	3.0	**2.4**	**2.0**	**2.2**

Table 8: Measurement repeatability using heparin venous blood

Intermediate precision in accordance with ISO 15197:2013

Evaluation site 6

Intermediate measurement precision was performed with Accu-Chek Mobile (Mut. Q-GDH 2) test cassettes (lots 297504, 297505 and 297506) and Accu-Chek Mobile (Model U1). 3 glucose control solutions with glucose concentrations in accordance with ISO 15197:2013 were used (see table 9).

For each test cassette lot, each glucose solution was measured once per day on 10 meters on 10 days, so that 100 individual measurements were generated. One test cassette was allocated to each meter.

The mean, standard deviation (SD), and coefficient of variation (CV) were calculated for each concentration range and lot (100 values). The 95 % confidence interval (CI) was calculated for the SD and CV in each case.

In addition, in accordance with ISO 15197:2013, the total mean, pooled variance, pooled SD and pooled CV were calculated for each glucose concentration using the 300 measurement results from all 3 cassette lots.

The criteria for glucose stability were met for all glucose solutions. The acceptance criteria were met for each lot and glucose solution.

Glucose solution No.	Glucose Concentration	
	mg/dL	mmol/L
1	30 to 50	1.7 to 2.8
2	96 to 144	5.3 to 8.0
3	280 to 420	15.5 to 23.3

Table 9: Glucose concentration ranges

	Concentration Range [mg/dL] [mmol/L]		
	30 to 50 1.7 to 2.8	96 to 144 5.3 to 8.0	280 to 420 15.5 to 23.0
N	300	300	300
Total mean [mg/dL]/[mmol/L]	44/2.4	126/7.0	390/21.7
Pooled SD [mg/dL]/[mmol/L]	**2.0/0.1**	2.8/0.2	7.8/0.4
Pooled CV [%]	4.6	**2.2**	**2.0**

Table 10: Intermediate precision based on the pooled data for 3 lots, according ISO 15198:2013

Potentially interfering active substances, blood additives and endogenous substances

Evaluation site 6

28 substances were tested in heparinized venous blood samples for their potential for interference. The procedure was in accordance with ISO 15197:2013. A substance is considered as an interferent if the calculated difference between the test sample and the blank sample (control sample) meets either of the following acceptance criteria:

For samples with glucose concentrations < 100 mg/dL, the mean bias per lot for each glucose/test substance combination exceeds ± 10 mg/dL.

For samples with glucose concentrations ≥ 100 mg/dL, the mean bias per lot for each glucose test substance combination exceeds ± 10 %.

For results within the limits of ± 10 mg/dL or ± 10 %, the test substance is considered to be not interfering.

In cases where the interference effect of the substances met the acceptance criteria, a dose-response evaluation was performed to determine the degree of interference as a function of the test substance concentration.

Results of the dose-response evaluation

- Ceftriaxone: The concentration where the interference just exceeds the acceptance criteria is 26 mg/dL (469 µmol/L).
- Galactose: The concentration where the interference just exceeds the acceptance criteria is 20 mg/dL (1097 µmol/L).

Test substance	Evaluation result
Acetaminophen (paracetamol)	No interference
Albumin human	No interference
Ascorbate (L-ascorbic acid)	No interference
Bilirubin conjugated	No interference
Bilirubin unconjugated	No interference
Ceftriaxone	Interference see pack insert
Cholesterol	No interference
Creatinine	No interference
Dopamine	No interference
EDTA	No interference
Galactose	Interference see pack insert
Gentisic acid	No interference
Glutathione (reduced)	No interference
Hemoglobin	No interference
Heparin Li	No interference
Heparin Na	No interference
Ibuprofen	No interference
Icodextrin	No interference
L-DOPA (L-3,4-dihydroxyphenylalanine	No interference
Maltose	No interference
Methyldopa	No interference
Pralidoxime iodide (PAM)	No interference
Salycylate (salicylic acid)	No interference
Tolazamide	No interference
Tolbutamide	No interference
Triglycerides (lipids)	No interference
Urate (uric acid)	No interference
Xylose	No interference

Table 11: Summary of results of testing potentially interfering substances

Influence of hematocrit according ISO 15197:2013

Evaluation site 6

Objective

To demonstrate that the blood glucose monitoring system provides correct glucose measurements in accordance with ISO 15197:2013 within the hematocrit range of 25 % to 55 %.

Acceptance Criteria

To demonstrate that results are not biased by hematocrit within a hematocrit range of 25 % to 55 %, the mean normalized bias for each lot and glucose/hematocrit combination shall not exceed the following tolerance limits:

±10 mg/dL (glucose concentration < 100 mg/dL)
±10 % (glucose concentration ≥ 100 mg/dL)

Results

The acceptance criteria were met for the hematocrit range of 25 % to 55 %.
None of the mean normalized bias values exceeded ± 10 mg/dL or 10%.

Conclusion

The system provides correct glucose measurements within the hematocrit range of 25 % to 55 %.

User study under everyday conditions (home use study)

Evaluation site 1

30 subjects with type 1 and 2 diabetes, aged 28 to 81 years, with a broad range of experience in blood glucose self-monitoring, tested the Accu-Chek Mobile system in everyday life. During the study the subjects performed blood glucose measurements using the Accu-Chek Mobile system including the Accu-Chek Fastclix M1 lancing device in parallel to the routinely performed self-testing with their own blood glucose monitoring system.

Glucose results obtained with the Accu-Chek Mobile system and those obtained with other systems showed a very good correlation, i.e. the accuracy of the Accu-Chek Mobile system was very high.
Reproducibility of measurements using the system specific control solution was very good.

System handling and ease of use were highly appreciated. The system's functions and features were rated very positively. The instructions for use were assessed to be comprehensible. Overall user satisfaction was high.

Human factors studies

Evaluation sites 2 and 4

Human factors studies on the Accu-Chek Mobile system were performed to show that the new system fulfills all Roche and regulatory requirements, particularly the usability standard IEC 62366:2007.

In total 53 persons participated in two human factors studies. The results showed that the Accu-Chek Mobile system fulfills all Roche and regulatory requirements.

Reliability of measurements under various environmental conditions

A blood glucose monitoring system which constantly accompanies a person with diabetes is often exposed to severe stress; however, this must not impair the function of the system.

As part of a technical evaluation, the reliability of the Accu-Chek Mobile system was tested for compliance with regulatory requirements under extreme environmental conditions.

The tests consisted of climatic stress tests, mechanical stress tests, electromagnetic compatibility and technical safety.

Environmental conditions

Evaluation site 5

Climatic stress

In a climatic stress test, Accu-Chek Mobile systems were exposed to cycles of differing temperature and humidity conditions during operation. The limit values were 10 °C and 40 °C, and 85 % relative humidity. This climatic stress test was not found to have any effect on the systems.

Transportation under extreme climatic conditions

In a special transport test, Accu-Chek Mobile systems were exposed to extreme temperature and climatic conditions. The limit values were –25 °C and +70 °C, and 93 % relative humidity. The systems were subsequently examined. No affect on system functioning or measuring performance was found.

Mechanical stress

Evaluation site 5

Vibration test

Various tests were performed on an electro dynamic shaker with noise acceleration.

Shock test

A special shock machine was used to expose systems to mechanical shocks of up to 100g. This, combined with the vibration test, simulates rough handling on shipment and transportation.

Drop test

The blood glucose monitoring systems were dropped from a height of one meter onto concrete floor.
The Accu-Chek Mobile system had to withstand being dropped onto each of its 6 sides without any impairment of measuring results.

Long-term stress

To simulate mechanical stress to which an Accu-Chek Mobile system can be exposed in its lifetime, at least 6,500 measuring cycles per system were performed with a set of Accu-Chek Mobile systems.

Checks made following individual testing revealed no impairment of operating and measuring performance.

Electromagnetic compatibility (EMC)

Evaluation site 5

Resistance to interference from high-frequency electromagnetic fields

On testing for resistance to interference from electro-magnetic fields, no impairment of system function or measurement result was found. The test procedure applied complied with standard EN 61000-4-3.
In accordance to EN ISO 15197 the tested frequency range was from 80MHz up to 2,500 MHz with a field strength of 3 V/m.

Electrostatic discharge (ESD)

A test rig in accordance with EN 61000-4-2 was used to check resistance to interference from electrostatic discharge as required in EN ISO 15197. Discharges of 2 kV to 15 kV were applied to various parts of the housing, such as the battery compartment, buttons, USB interface and the display. No damage to the systems investigated or any false glucose measuring results were observed.

Effects of magnetic fields

The systems were placed in a Helmholtz coil and exposed to a magnetic field of 50 Hz and 60 Hz with 3 A/m. Here too, no effect on system function or measuring results was found.

Radio interference

With respect to radiated electromagnetic energy, the Accu-Chek Mobile system fulfills the stringent class B (for use in the residential environment) under EN 55011 with an adequate safety margin. An effect on other electrical appliances or radio connections (e.g. cordless telephones) by the Accu-Chek Mobile system can therefore largely be excluded.
The Accu-Chek Mobile system complies with RTCA DO-160 (section 21, category M), and therefore can be used on board aircraft.

Safety (electrical/mechanical)

Evaluation site 3

The Accu-Chek Mobile system meets the requirements of EN 61010-2-101, EN 61010-1/IEC 61010-1 and also of EN 60950-1/IEC 60950-1 (evidence produced by an accredited external test laboratory).

Conclusion

The Accu-Chek Mobile® system was evaluated carefully at external and internal sites. It showed very good analytical properties and met all regulatory requirements, in particular those of the standard ISO 15197:2013.

Furthermore, the new system is characterized by a high comfort of use.

In summary, the Accu-Chek Mobile system enables reliable, accurate and precise, but also simple, comfortable and safe self-monitoring of blood glucose.

Notice

Notice

Experience what's possible.

ACCU-CHEK, ACCU-CHEK MOBILE and FASTCLIX are trademarks of Roche.
© 2014 Roche Diagnostics.

www.accu-chek.com
Roche Diagnostics GmbH
Sandhofer Strasse 116
68305 Mannheim
Germany

Roche

ACCU-CHEK®